2203 S. Promenade Blvd.
Suite 8220
Rogers, AR 72758
Office: 479-927-3311
www.everestrailcar.com

3250 Pressure Differential Covered Hopper

DIMENSIONS	
Length Inside	39'-3"
Length Over Couplers	44'-3"
Extreme Height	15'
Extreme Width	10'-4"
Hatch Configuration	20"-Round
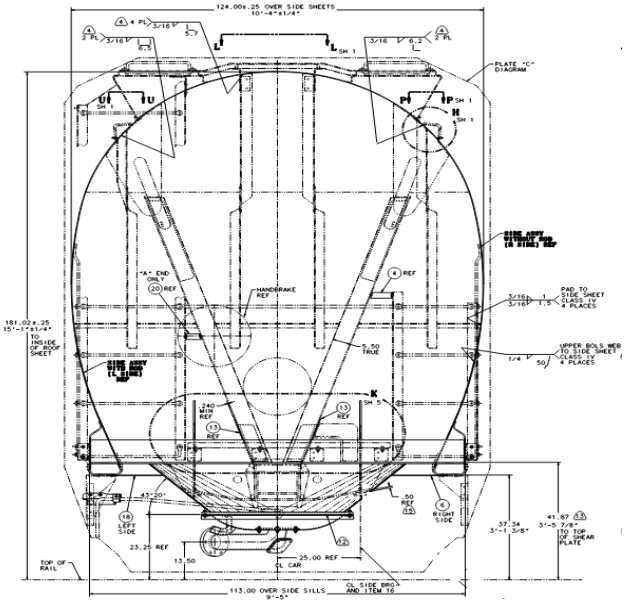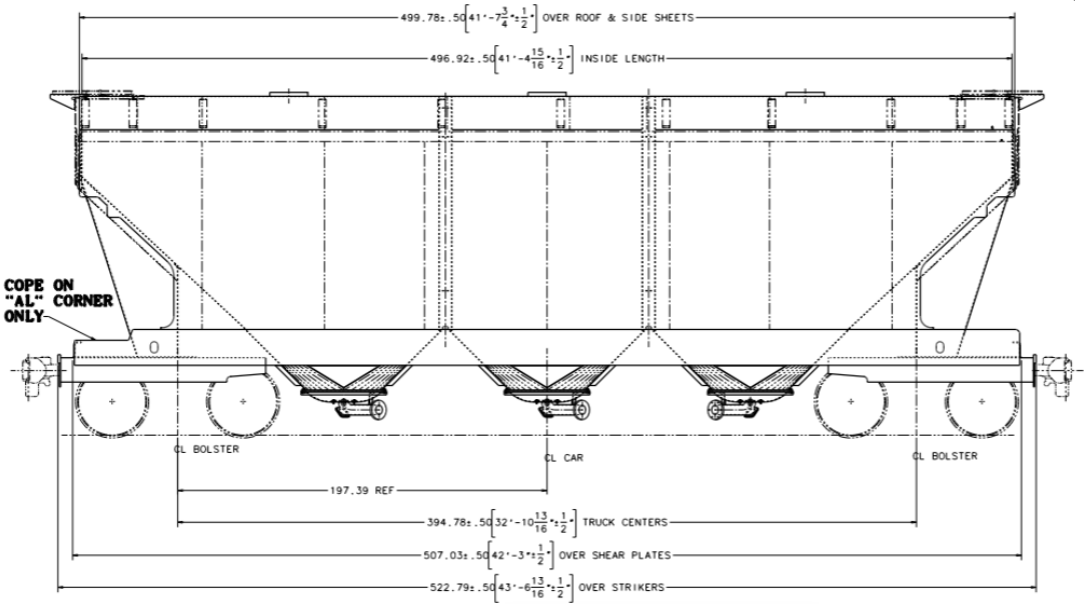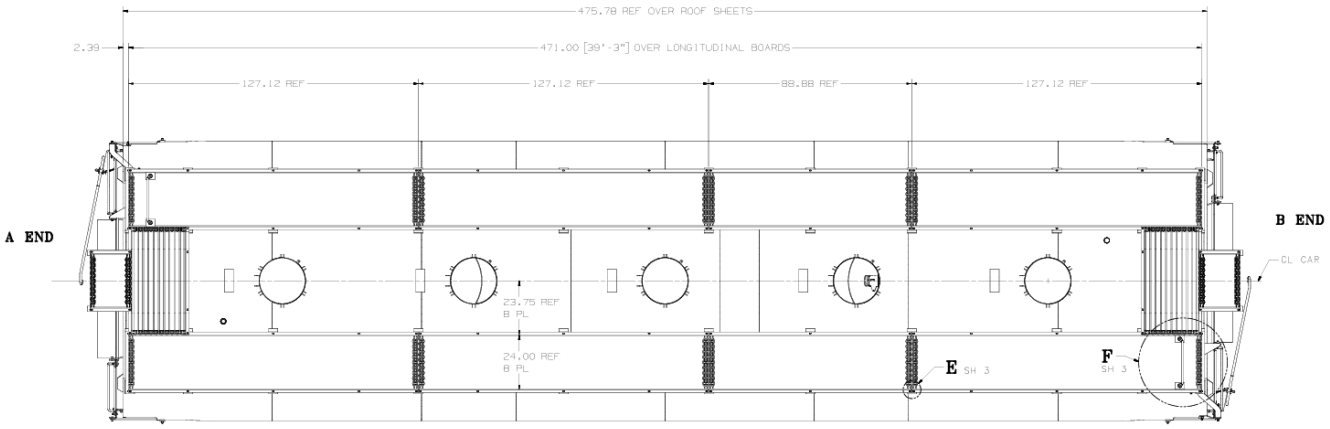
CAPACITY	
Light Weight	54,000
Load Limit	232,000
Gross Rail Load	286,000
Cubic Foot	3250