2203 S. Promenade Blvd.
Suite 8220
Rogers, AR 72758
Office: 479-927-3311
www.everestrailcar.com

5800 Plastic Pellet Covered Hopper

DIMENSIONS	
Length Inside	59'-10 3/16"
Length Over Couplers	64'-8"
Extreme Height	15'-6"
Extreme Width	10'-8"
Gate	Pneumatic
Hatch Configuration	Round-20”
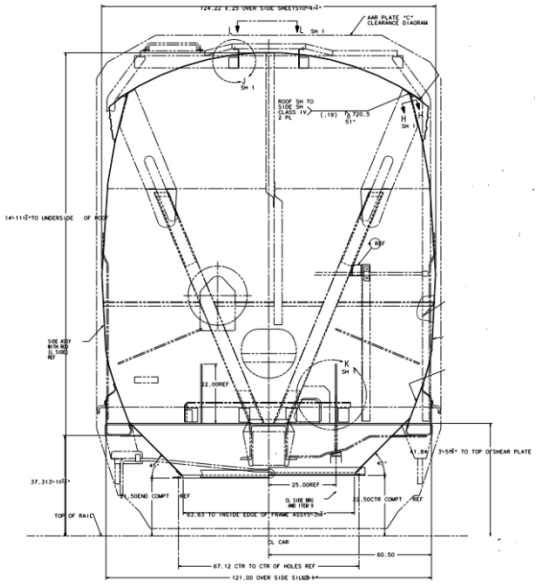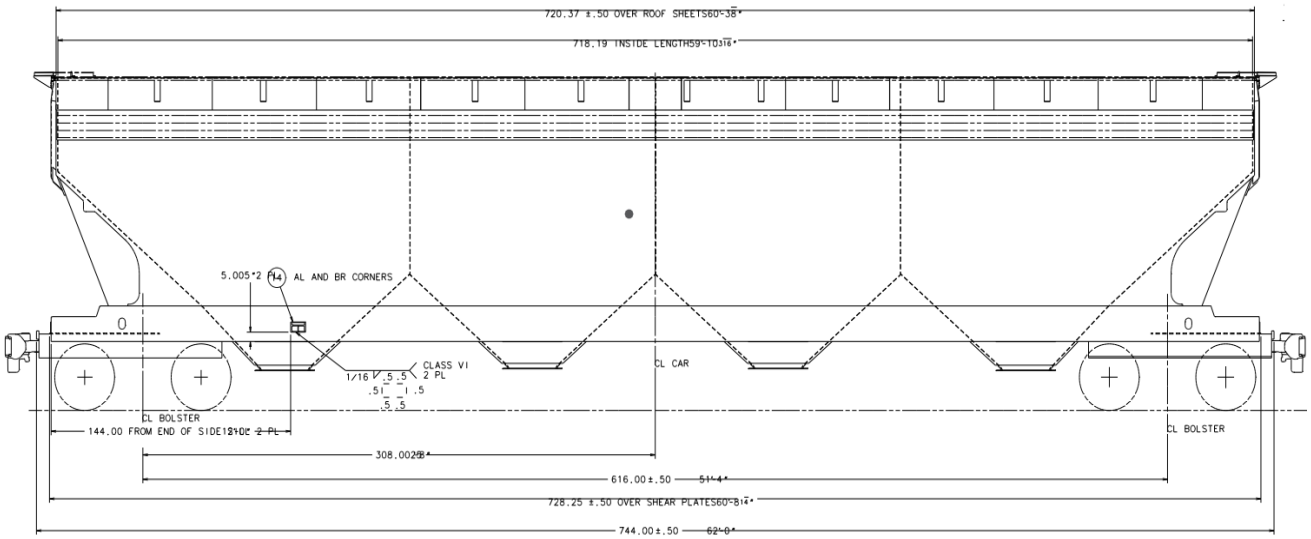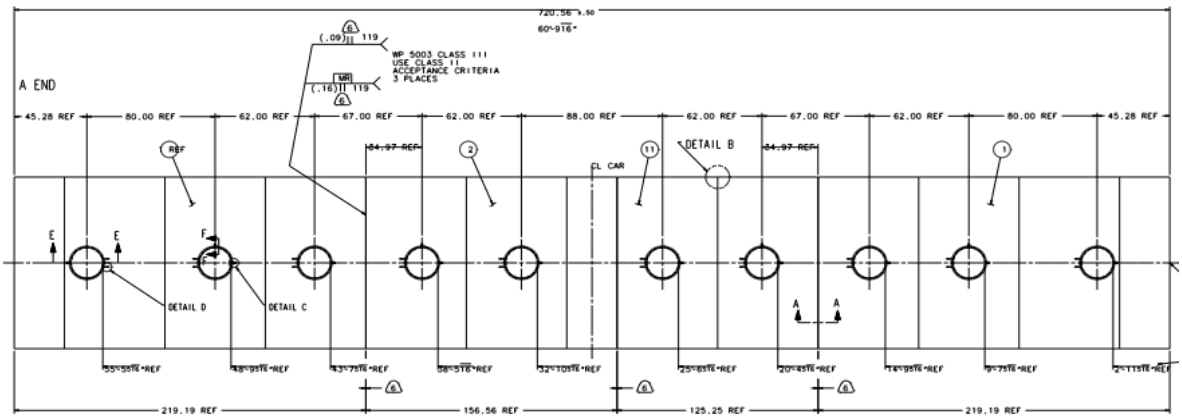
CAPACITY	
Light Weight	65,200
Load Limit	220,800
Gross Rail Load	286,000
Cubic Foot	5800