2203 S. Promenade Blvd.
Suite 8220
Rogers, AR 72758
Office: 479-927-3311
www.everestrailcar.com

25,650 Gallon J117 Tank Car

DIMENSIONS	
Length Inside	53'-9 1/4"
Length Over Couplers	59'-6"
Extreme Height	15'-6"
Extreme Width	10'-8"
BOV	4"-Jamesbury
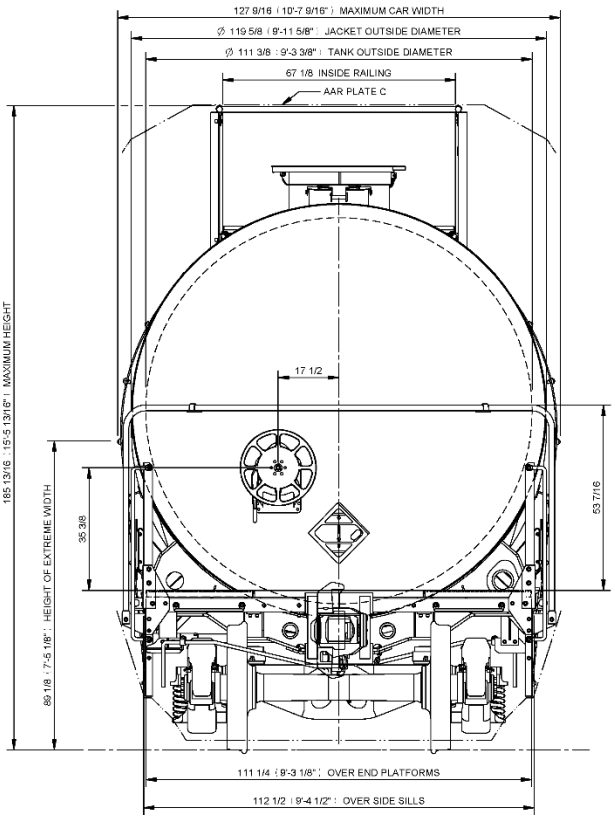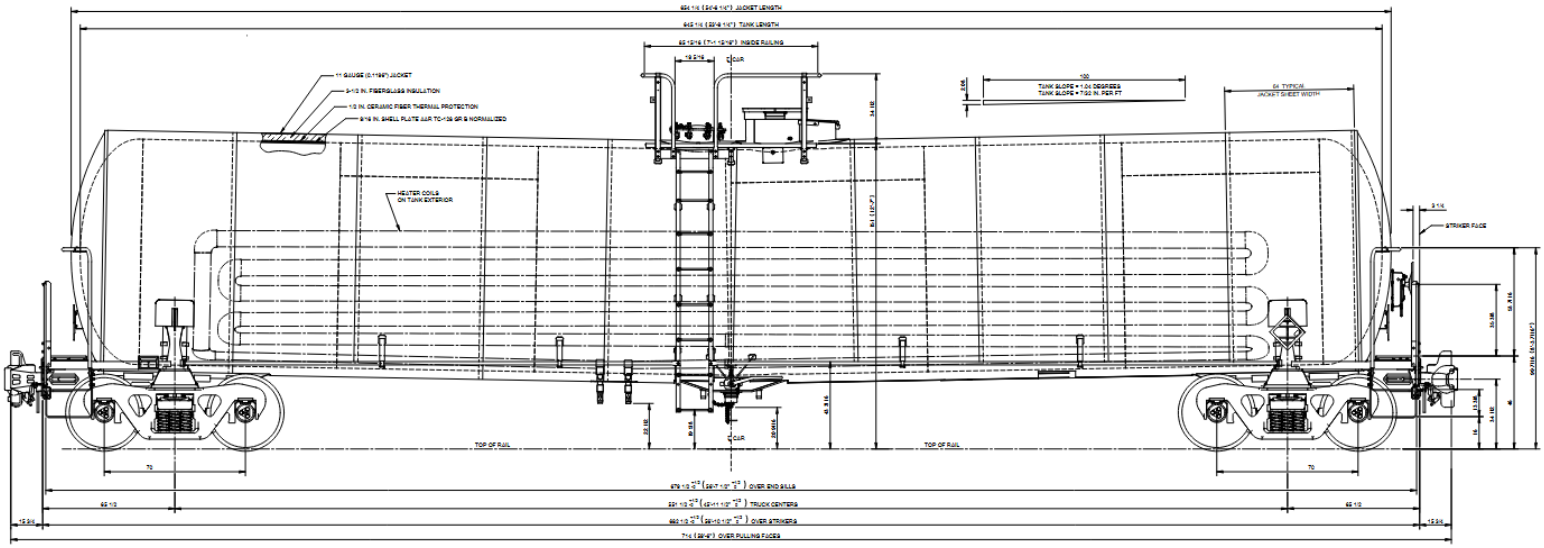
CAPACITY	
Light Weight	89,300
Load Limit	196,700
Gross Rail Load	286,000
Gallons	25,650